3/8" diameter bolt – 2 2/3" x 1/2" corrugated steel

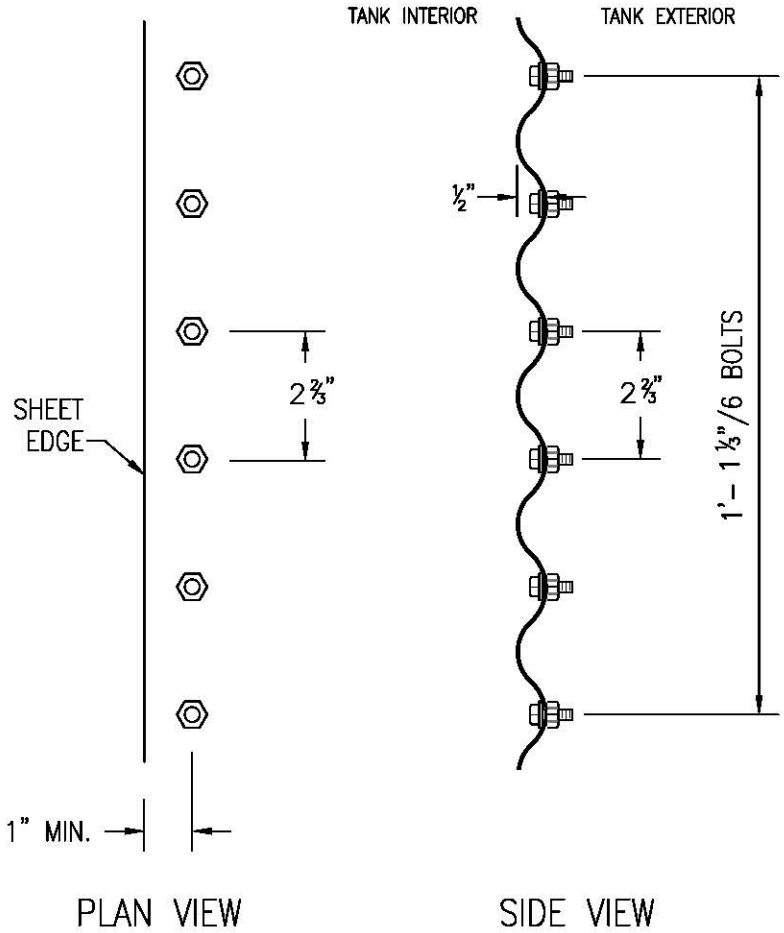

NOTE: Bolt in bottom of each corrugation.

FIGURE 1 – SINGLE ROW

4 2 0 4

Scale in inches

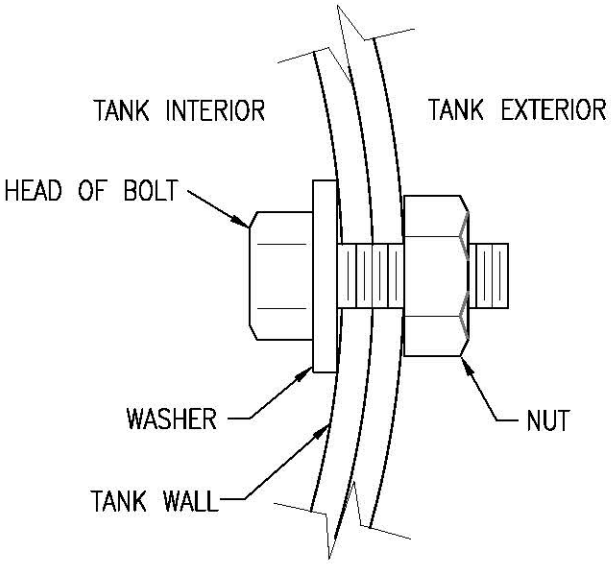

BOLT & NUT DETAIL

NOT TO SCALE

NRCS
Natural Resources Conservation Service
United States Department of Agriculture

COUNTY	PROJECT			
FIELD OFFICE	DRAWN BY CR	DATE MAY05	CHECKED BY JL	DATE MAY05
SUBJECT 3/8" DIAMETER BOLTS – SINGLE ROW				
SHEET ___ OF ___	JOB NO.		FORM NO. HI–ENG–043	REV–11/11